Electrolux PROFESSIONAL

ITEM #

MODEL #

NAME #

SIS #

AIA #

Frozen
Frozen granita dispenser with 2 bowls, mechanical control and lighted panel

562506 (IPRO2MLR290) Frozen Granita Dispenser with 2X11 l insulated bowls, mechanical control and lighted panel, R290

Short Form Specification

Item No.

Frozen granita dispenser with 2 bowls; the ITANK ™ Technology prevents ice accumulation on the outer side of the bowl and the bowl shape allows a natural mixing action to ensure an optimum consistency of the product. Customizable lid merchandiser and back graphic. Mechanical keypad allows for setting of cooling and defrost modes. Front illuminated panel provides customers with the opportunity to advertise their product and maximise impulse buying. Electromechanical control. Sliding drip tray.

APPROVAL:

Main Features

- Ideal for the production of slush.
- The ITANK ™ Technology prevents ice accumulation on the outer side of the bowl, reducing condensation and increasing the cooling power of the machine.
- Bowl shape allows a natural mixing action to ensure an optimum consistency of the product.
- Customizable lid merchandiser and back graphic.
- Ideal for operators who want an innovative and distinctive equipment. Mechanical keypad allows for setting of cooling and defrost modes.
- The front illuminated panel provides customers with the opportunity to advertise their product and maximise impulse buying.
- The insulated tank guarantees higher cooling efficiency and lower effect of the external temperature on product's preparation and maintenance time reducing condense and draining; it is the best solution in hot climate conditions.

Construction

- Electromechanical control.
- Sliding drip tray.

Electrolux PROFESSIONAL

Frozen
Frozen granita dispenser with 2 bowls, mechanical control and lighted panel

Front

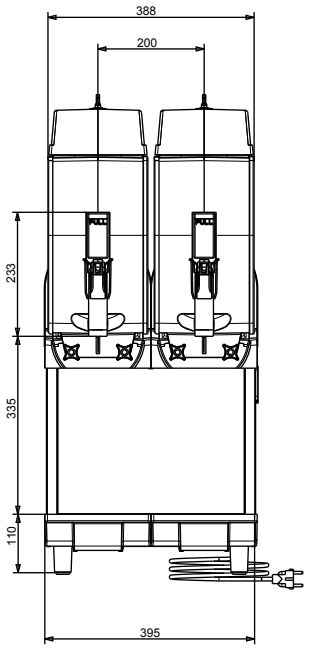

Side

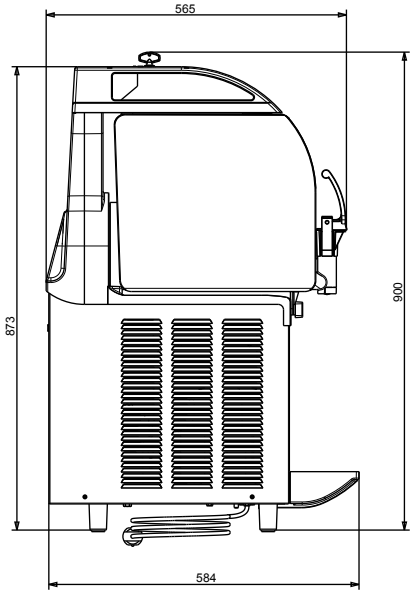

Top

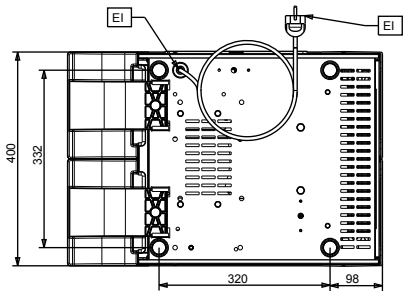

Electric

Supply voltage:	
562506 (IPRO2MLR290)	220-240 V/1 ph/50 Hz
Electrical power max.:	0.79 kW

Key Information:

External dimensions, Width:	400 mm
External dimensions, Depth:	580 mm
External dimensions, Height:	870 mm
Net weight:	60 kg

Sustainability

Refrigerant type:	R290
Refrigerant weight:	106 g

The company reserves the right to make modifications to the products without prior notice. All information correct at time of printing.

2024.10.07